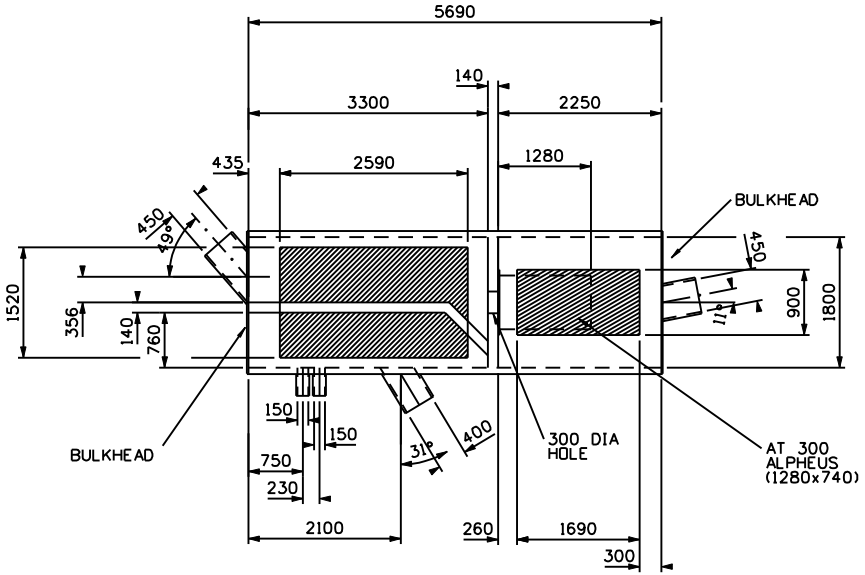

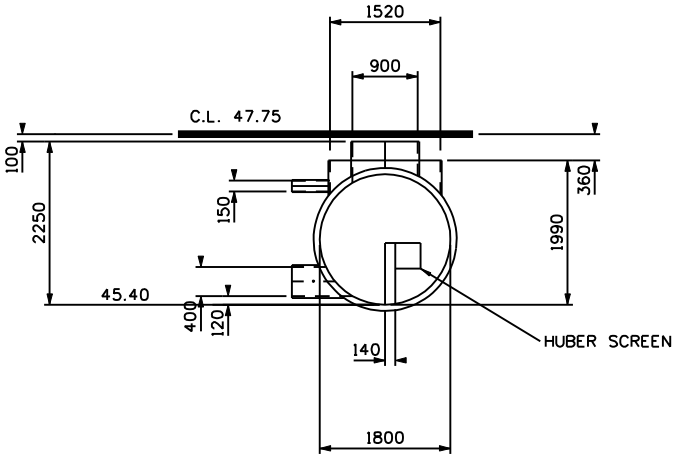

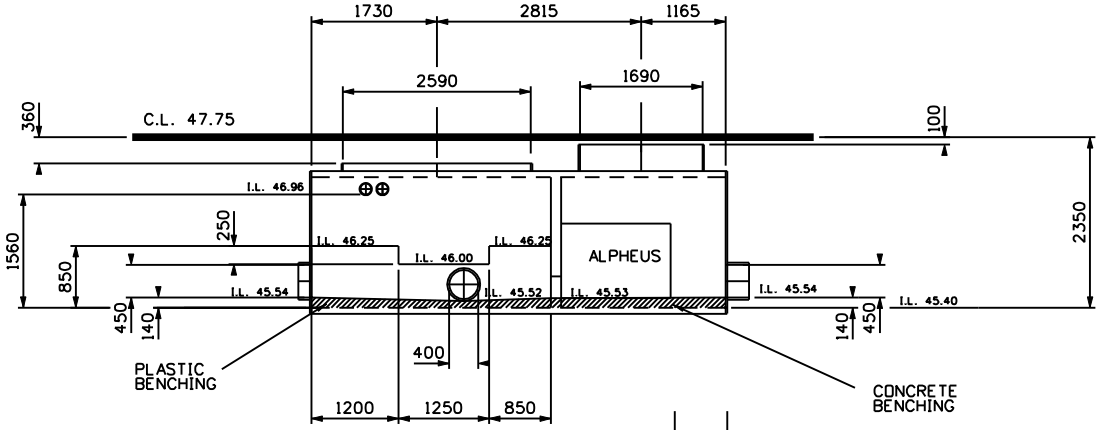

THIS DRAWING AND ASSOCIATED DETAILS ARE
THE PROPERTY OF ASSET INTERNATIONAL LTD.
AND MAY NOT BE COPIED NOR DISCLOSED TO
A THIRD PARTY WITHOUT WRITTEN PERMISSION

REV		DR	DATE
A	LAYOUT AMMENDED IN LINE WITH CUST. E-MAIL DATED 12/11/04	SDK	15/11/2004

Client

HYDER/MORRISON

ASSET International Ltd.

Stephenson Street, Newport, NP19 4XH
Web Site: http://www.weholite.co.uk
Telephone: 01633 271906
Fax: 01633 290519

Drawn By S.KALIES
Checked By
Pipe Class 2 kN/m²
Scale 1 : 75
Date 22/10/04

Title
1800mm DIAMETER LITESPEED
CHAMBER-CHAINBRIDGE

Drg. No. PLA-147

REV. A

...\PLA-147-WW-LITE2 Chain.dgn 07/03/2006 09:21:19